Compo
TCO2012A

IBL Baustoff + Labor GmbH
TEL +43 2246 20 500
ibl@ibl.at www.ibl.at

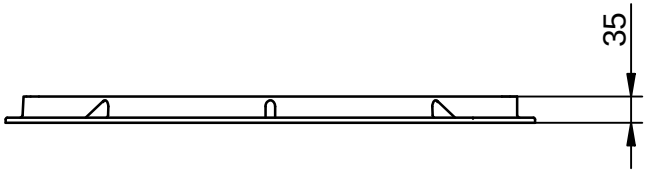

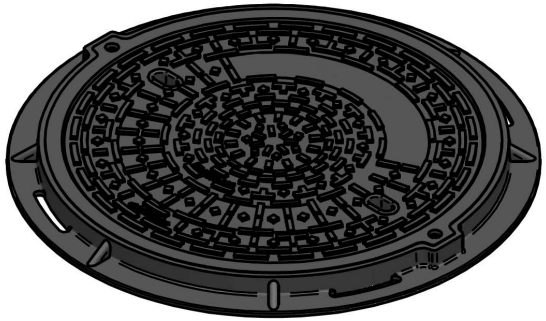

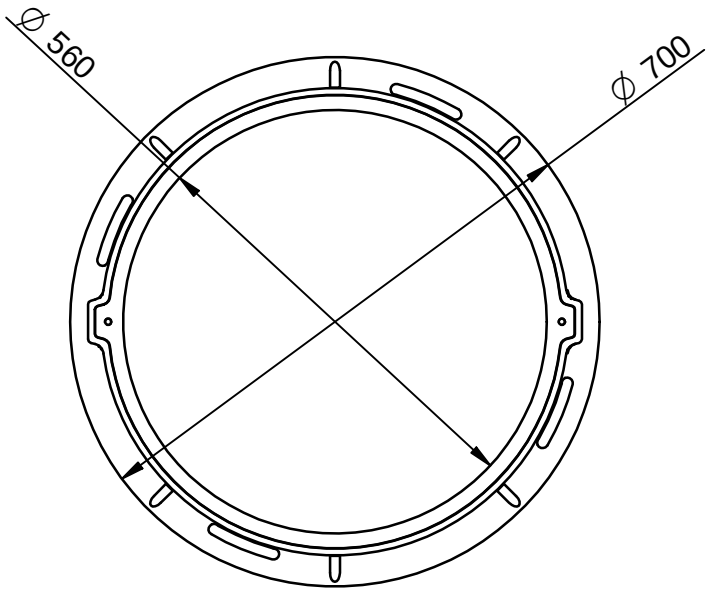

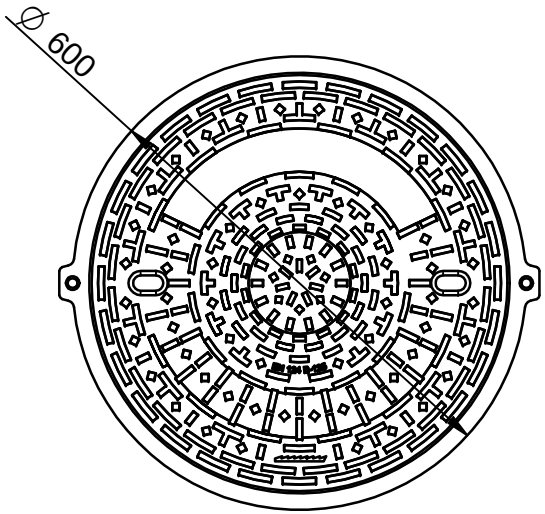

V 01 22/02/2016